M8 male 0° with cable

RADOX EM 104 3x0.5 bk 15m

Male straight
M8, 3-pole
with cable sleeves
Plastic housings with good resistance against chemicals and oils.
The resistance to aggressive media should be individually tested for your application. Further details on request.
Further cable lengths on request.

Linkki tuotteeseen

Kuvat

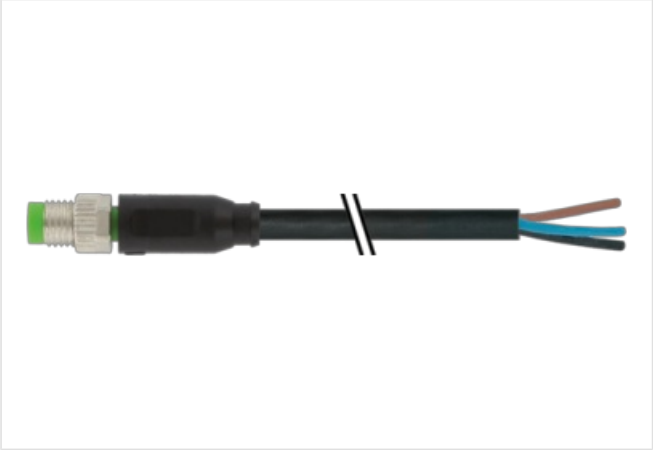

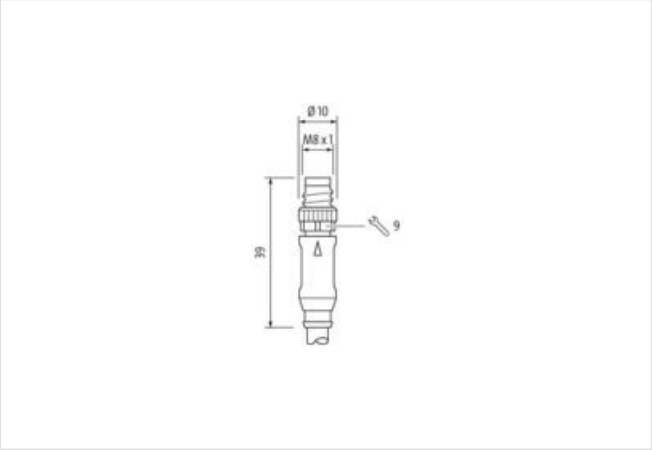

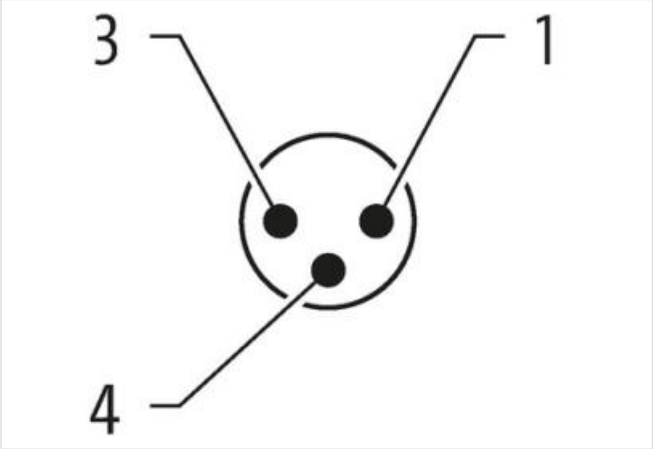

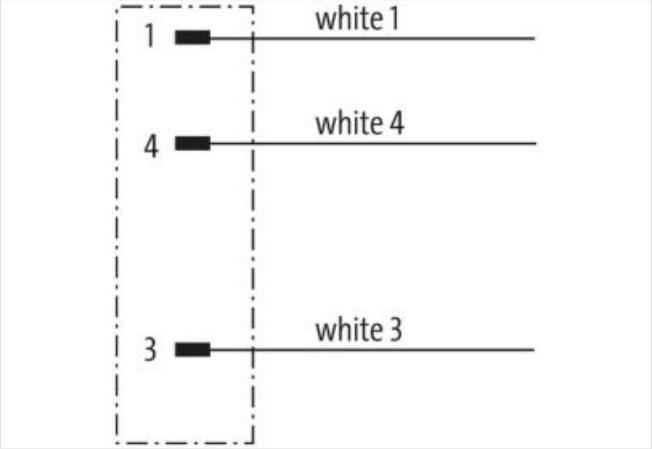

Tuote voi erota kuvassa olevasta

Cable length	15 m

Side 1

Tightening torque	0,4 Nm

Tämän tietolomakkeen tiedot on laadittu suurimmalla mahdollisella huolellisuudella.
Vahingonkorvausvastuu koskien tietojen oikeellisuutta, laajuutta ja ajankohtaisuutta kattaa ainoastaan törkeän laiminlyönnin. Versio: 26.04.2024

Mounting method	inserted, screwed
Family construction form	M8
Thread	M8 x 1
suitable for corrugated tube (internal Ø)	6,5 mm
No. of poles	3
Width across flats	SW9
Degree of protection (EN IEC 60529)	IP65, IP66K, IP67
Side 2	
Stripping length (jacket)	40 mm
Kaupalliset tiedot	
ECLASS-6.0	27279218
ECLASS-7.0	27279218
ECLASS-8.0	27279218
ECLASS-9.0	27060311
ECLASS-10.1	27060311
ECLASS-11.1	27060311
ECLASS-12.0	27060311
ETIM-5.0	EC001855
GTIN	4048879820165
Pakkauskoko	1
Tullinumero	85444290
Electrical data | Supply	
Operating voltage AC max.	50 V
Operating voltage DC max.	60 V
Current operating per contact max.	4 A
Diagnostics	
Status indication LED	no
Installation | Connection	
Stripping length (jacket)	40 mm
Device protection | Electrical	
Additional condition protection degree	inserted, screwed
Pollution Degree	3
Rated surge voltage	1,5 kV
Material group (IEC 60664-1)	I
Mechanical data | Material data	
Coating locking	nickel plated
Material housing	PUR
Locking material	Brass
Mechanical data | Mounting data	
Mounting method	inserted, screwed, Shaking protection
Environmental characteristics | Climatic	
Operating temperature min.	-25 °C
Operating temperature max.	85 °C
Additional condition temperature range	depending on cable quality
Conformity	
Product standard	DIN EN 61076-2-114 (M8)
Installation | Cable	
Cable identification	R02
Printing color of wire insulation	black (white isolation)
Printing spacing of wire insulation	15 mm

Tämän tietolomakkeen tiedot on laadittu suurimmalla mahdollisella huolellisuudella.
Vahingonkorvausvastuu koskien tietojen oikeellisuutta, laajuutta ja ajankohtaisuutta kattaa ainoastaan törkeän laiminlyönnin. Versio: 26.04.2024

Jacket Color	black
Stranding	3 wires twisted
wire arrangement	white 3, white 2, white 1
Cable weigth	41,8 g/m
Material jacket	Radox EM 104
Outer-diameter (jacket)	4,6 mm
Tolerance outer diameter (sheath)	± 5 %
Material wire insulation	Radox EI 303
Amount wires	3
Outer diameter insulation	1,42 mm
Outer diameter tolerance core insulation	± 5 %
Printing color of wire insulation	black (white isolation)
Printing spacing of wire insulation	15 mm
Amount strands (wire)	19
Diameter of single wires	0,18 mm
Conductor crosssection (wire)	0,5 mm²
Material conductor wire	copper stranded wire, tinned
Current load capacity (standard)	to DIN VDE 0298-4
Current load capacity min. wire	9 A
Electrical resistance line constant wire	40,1 Ω/km @ 20 °C
Max. rated voltage power (conductor - ground)	600 V
Max. rated voltage power (conductor - conductor)	1000 V
Power frequency withstand voltage power (wire - jacket)	3,5 kV
AC withstand voltage power (wire - wire)	3,5 kV
Min. operating temperature (static)	-50 °C
Max. operating temperature (fixed)	120 °C
Operating temperature min. (dynamic)	-25 °C
Operating temperature max. (dynamic)	90 °C
UV resistance	DIN EN ISO 4892-2 A
Flame resistance	UL 1581 § 1090 | IEC 60332-2-2 | UL 1581 § 1100 FT2
chemical resistance	Good, application-related testing
Gasoline resistance	Good, application-related testing
Oil resistance	DIN EN 60811-404 | Good, application-related testing
Bending radius (fixed)	3 x Outer diameter
Bending radius (dynamic)	4 x Outer diameter

Tämän tietolomakkeen tiedot on laadittu suurimmalla mahdollisella huolellisuudella.
Vahingonkorvausvastuu koskien tietojen oikeellisuutta, laajuutta ja ajankohtaisuutta kattaa ainoastaan törkeän laiminlyönnin. Versio: 26.04.2024