Valve plug MDCY06-4s / 2x Junior Timer 0°

PUR 2x0.75 bk UL/CSA+drag chain 1m

Xtreme - Outdoor
Y connector
6...230 V AC/DC
Compatible with:
Deutsch DT06-4S
Junior Power Timer (AMP)
without components
Plastic housings with good resistance against chemicals and oils.
The resistance to aggressive media should be individually tested for your application. Further details on request.
Further cable lengths on request.

Linkki tuotteeseen

Kuvat

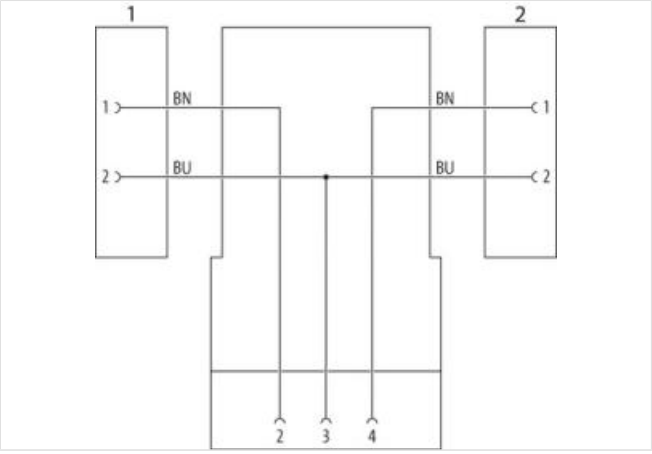

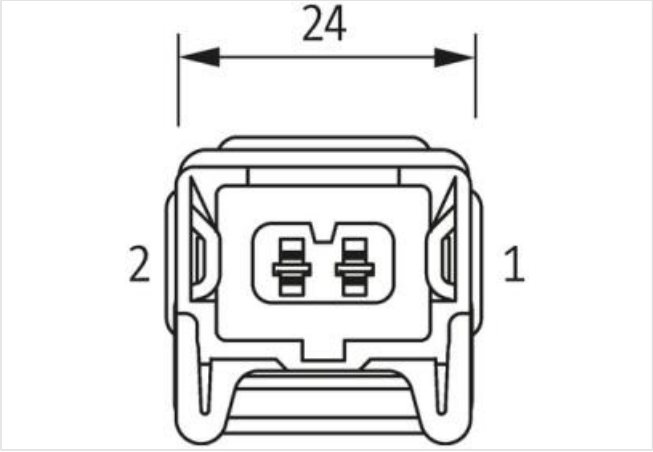

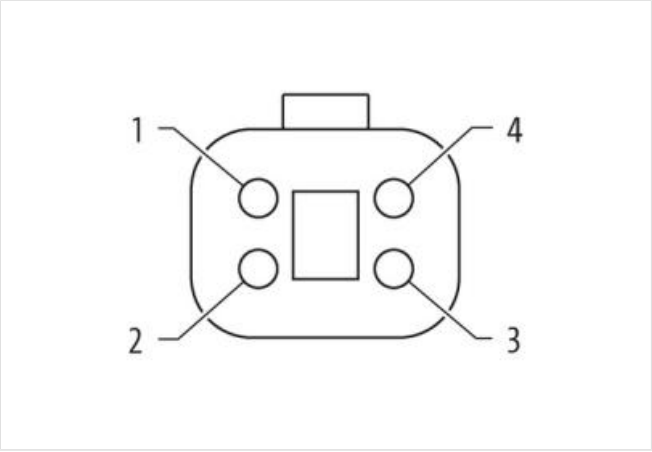

Tämän tietolomakkeen tiedot on laadittu suurimmalla mahdollisella huolellisuudella.
Vahingonkorvausvastuu koskien tietojen oikeellisuutta, laajuutta ja ajankohtaisuutta kattaa ainoastaan törkeän laiminlyönnin. Versio: 20.04.2024

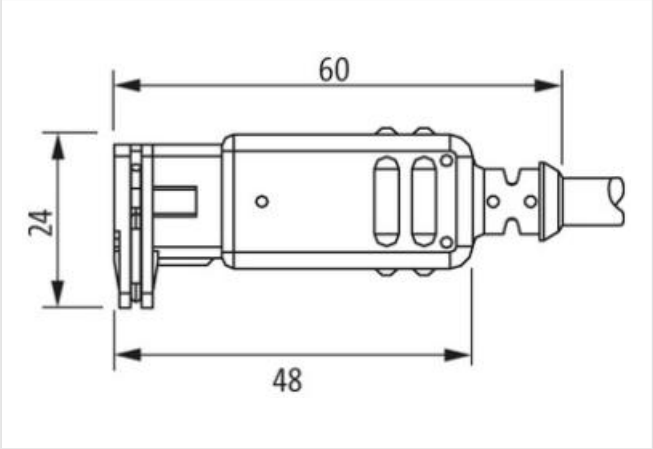

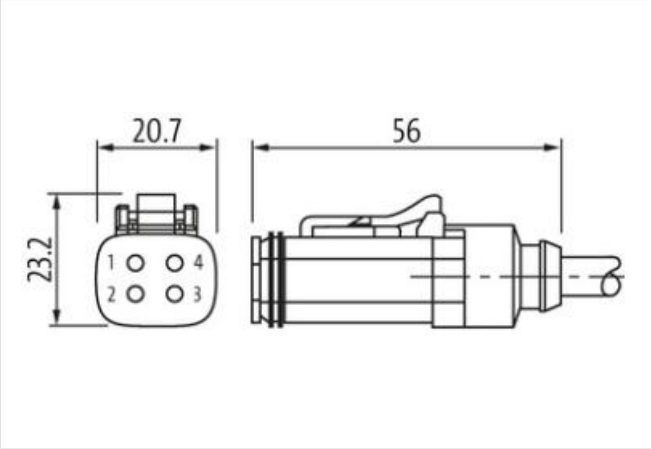

Tuote voi erota kuvassa olevasta

Cable length	1 m
Side 1	
Mounting method	inserted
Coating contact	nickel plated
Family construction form	Amphenol AT06-3S
Material contact	Copper alloy
No. of poles	3
Degree of protection (EN IEC 60529)	IP68
Side 2	
Mounting method	inserted
Coating contact	nickel plated
Family construction form	MJT
Material contact	Copper alloy
No. of poles	2
Degree of protection (EN IEC 60529)	IP65
Side 3	
Family construction form	MJT
Material contact	Copper alloy
No. of poles	2
Kaupalliset tiedot	
ECLASS-6.0	27279218
ECLASS-7.0	27279218
ECLASS-8.0	27279218
ECLASS-9.0	27060311
ECLASS-10.1	27060312
ECLASS-11.1	27060312
ECLASS-12.0	27060312
ETIM-5.0	EC001855
GTIN	4065909026038
Pakkauskoko	1
Tullinumero	85444290
Electrical data | Supply	
Operating voltage AC min.	6 V
Operating voltage AC max.	230 V
Operating voltage DC min.	6 V
Operating voltage DC max.	230 V

Tämän tietolomakkeen tiedot on laadittu suurimmalla mahdollisella huolellisuudella.
Vahingonkorvausvastuu koskien tietojen oikeellisuutta, laajuutta ja ajankohtaisuutta kattaa ainoastaan törkeän laiminlyönnin. Versio: 20.04.2024

Current operating per contact max.	4 A
Diagnostics	
Status indication LED	no
Installation | Connection	
Family construction form	Amphenol AT06-4S
Device protection | Electrical	
Pollution Degree	3
Rated surge voltage	2,5 kV
Material group (IEC 60664-1)	I
Mechanical data | Material data	
Material gasket	Silicon
Material housing	PA
Mechanical data | Mounting data	
Looking techniques	Snap-in connector
Environmental characteristics | Climatic	
Operating temperature min.	-25 °C
Operating temperature max.	85 °C
Additional condition temperature range	depending on cable quality
Installation | Cable	
Cable identification	754
Cable Type	3
Jacket Color	black
Type of Certificate	cURus
Amount stranding	1
Stranding	2 wires twisted
wire arrangement	brown, blue
No. of bending cycles (C-track)	10 Mio. @ 25 °C
Cable weigth	40,7 g/m
Material jacket	PUR
Shore hardness jacket	90 ± 5 Shore A
Freedom from ingredients (jacket)	lead-free, cadmium-free, CFC-free, halogen-free, silicone-free
Outer-diameter (jacket)	5 mm
Tolerance outer diameter (sheath)	± 5 %
Material wire insulation	PP
Amount wires	2
Outer diameter insulation	1,7 mm
Outer diameter tolerance core insulation	± 5 %
Shore hardness wire insulation	70 ± 5 Shore D
Ingredient freeness wire insulation	lead-free, cadmium-free, CFC-free, halogen-free, silicone-free
Amount strands (wire)	42
Diameter of single wires	0,15 mm
Conductor crosssection (wire)	0,75 mm²
Material conductor wire	Stranded copper wire, bare
Conductor type (wire)	strand class 6
Traversing distance (C-track)	10 m @ 25 °C | horizontal
Current load capacity (standard)	to DIN VDE 0298-4
Current load capacity min. wire	12 A
Electrical resistance line constant wire	26 Ω/km @ 20 °C
Nominal voltage power AC max.	300 V
Power frequency withstand voltage power (wire - jacket)	2,5 kV @ 60 s
AC withstand voltage power (wire - wire)	2,5 kV @ 60 s

Tämän tietolomakkeen tiedot on laadittu suurimmalla mahdollisella huolellisuudella.
Vahingonkorvausvastuu koskien tietojen oikeellisuutta, laajuutta ja ajankohtaisuutta kattaa ainoastaan törkeän laiminlyönnin. Versio: 20.04.2024

Min. operating temperature (static)	-40 °C
Max. operating temperature (fixed)	80 °C / 90 °C @ 10000 h Operation
Operating temperature min. (dynamic)	-25 °C
Operating temperature max. (dynamic)	80 °C / 90 °C @ 10000 h Operation
UV resistance	DIN EN ISO 4892-2 A
Flame resistance	UL 1581 § 1090 | UL 1581 § 1100 FT2 | IEC 60332-2-2
chemical resistance	Good, application-related testing
Gasoline resistance	Good, application-related testing
Oil resistance	DIN EN 60811-404 | Good, application-related testing
Bending radius (fixed)	5 x Outer diameter
Bending radius (dynamic)	10 x Outer diameter
No. of torsion cycles	2 Mio.
Torsion speed	35 cycles/min
Torsion stress	± 180 °/m

Tämän tietolomakkeen tiedot on laadittu suurimmalla mahdollisella huolellisuudella.
Vahingonkorvausvastuu koskien tietojen oikeellisuutta, laajuutta ja ajankohtaisuutta kattaa ainoastaan törkeän laiminlyönnin. Versio: 20.04.2024