M12 female 0° A-cod. with cable shielded

PVC 5x0.34 shielded bk UL/CSA 10m

M12, 5-pole
Female straight
shielded
with cable sleeves
Plastic housings with good resistance against chemicals and oils.
The resistance to aggressive media should be individually tested for your application. Further details on request.
Further cable lengths on request.

Linkki tuotteeseen

Kuvat

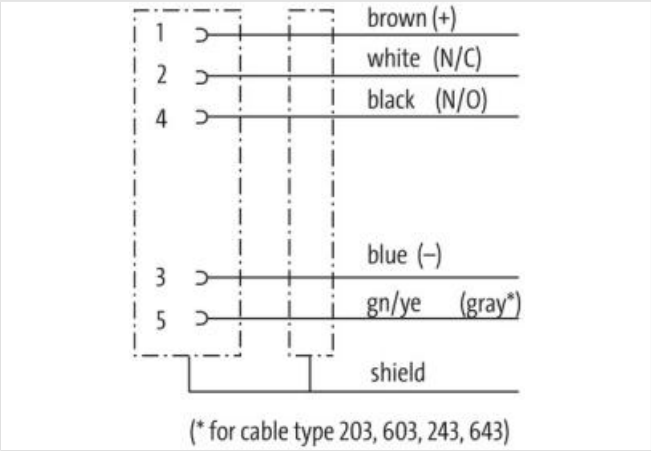

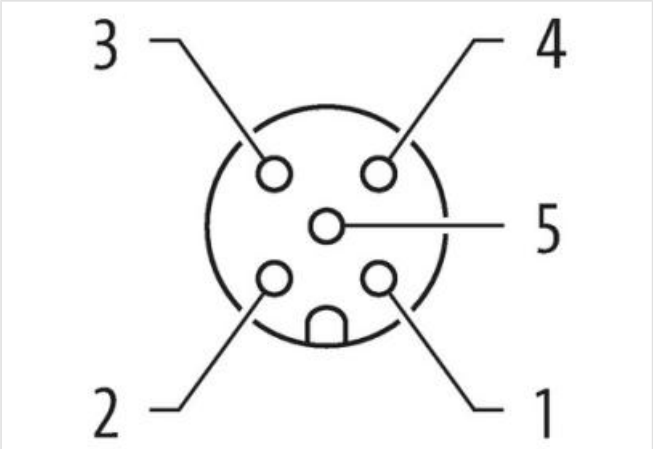

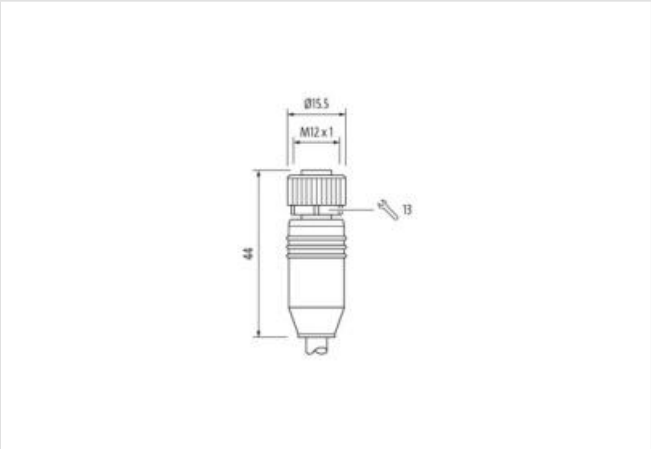

Tuote voi erota kuvassa olevasta

Cable length	10 m
Side 1	
Tightening torque	0,6 Nm

Tämän tietolomakkeen tiedot on laadittu suurimmalla mahdollisella huolellisuudella.
Vahingonkorvausvastuu koskien tietojen oikeellisuutta, laajuutta ja ajankohtaisuutta kattaa ainoastaan törkeän laiminlyönnin. Versio: 24.04.2024

Mounting method	inserted, screwed
Family construction form	M12
Thread	M12 x 1
Cable outlet	straight
Coding	A
Material	PUR
Width across flats	SW13
Degree of protection (EN IEC 60529)	IP65, IP66K, IP67
Side 2	
Stripping length (jacket)	20 mm
Kaupalliset tiedot	
ECLASS-6.0	27279218
ECLASS-7.0	27279218
ECLASS-8.0	27279218
ECLASS-9.0	27060311
ECLASS-10.1	27060311
ECLASS-11.1	27060311
ECLASS-12.0	27060311
ETIM-5.0	EC001855
GTIN	4048879758161
Pakkauskoko	1
Tullinumero	85444290
Electrical data | Supply	
Operating voltage AC max.	60 V
Operating voltage DC max.	60 V
Operating voltage AC (UL-listed)	30 V
Operating voltage DC (UL-listed)	30 V
Current operating per contact max.	4 A
Installation | Connection	
Stripping length (jacket)	20 mm
Mounting set	M12 x 1
Gender	female
Device protection | Electrical	
Additional condition protection degree	inserted, screwed
Pollution Degree	3
Rated surge voltage	1,5 kV
Material group (IEC 60664-1)	I
Mechanical data	
Contour for corrugated hose	without
Mechanical data | Material data	
Coating locking	Nickeled
Coating of fitting	nickel plated
Locking material	Zinc die-casting
Material screw connection	Zinc die-casting
Mechanical data | Mounting data	
Mounting method	inserted, screwed, Shaking protection
Environmental characteristics | Climatic	
Operating temperature min.	-25 °C
Operating temperature max.	85 °C
Additional condition temperature range	depending on cable quality
Conformity	

Tämän tietolomakkeen tiedot on laadittu suurimmalla mahdollisella huolellisuudella.
Vahingonkorvausvastuu koskien tietojen oikeellisuutta, laajuutta ja ajankohtaisuutta kattaa ainoastaan törkeän laiminlyönnin. Versio: 24.04.2024

Product standard	DIN EN 61076-2-101 (M12)
Installation | Cable	
Cable identification	603
Cable Type	1
Jacket Color	black
Type of Certificate	cURus
Amount stranding	1
Stranding	5 wires around Core filler twisted
Cable shielding (type)	copper braid, tinned
Cable shielding (coverage)	80 %
Banding	Fleece, Foil
Filler	yes
wire arrangement	brown, black, blue, white, gray
Cable weigth	68,2 g/m
Material jacket	PVC
Shore hardness jacket	85 ± 5 Shore A
Freedom from ingredients (jacket)	lead-free, cadmium-free, CFC-free, silicone-free
Outer-diameter (jacket)	5,6 mm
Tolerance outer diameter (sheath)	± 5 %
Material wire insulation	PVC
Amount wires	5
Outer diameter insulation	1,25 mm
Outer diameter tolerance core insulation	± 5 %
Shore hardness wire insulation	45 ± 5 Shore D
Material properties wire insulation	good machinability
Ingredient freeness wire insulation	lead-free, cadmium-free, CFC-free, silicone-free
Amount strands (wire)	19
Diameter of single wires	0,15 mm
Conductor crosssection (wire)	0,34 mm²
Material conductor wire	Stranded copper wire, bare
Conductor type (wire)	Strand class 5
Current load capacity (standard)	to DIN VDE 0298-4
Current load capacity min. wire	4,5 A
Electrical resistance line constant wire	57 Ω/km @ 20 °C
Nominal voltage power AC max.	300 V
AC withstand voltage power (wire - shield)	2 kV @ 60 s
Power frequency withstand voltage power (wire - jacket)	2 kV @ 60 s
AC withstand voltage power (wire - wire)	2 kV @ 60 s
Min. operating temperature (static)	-30 °C
Max. operating temperature (fixed)	80 °C
Operating temperature min. (dynamic)	-5 °C
Operating temperature max. (dynamic)	80 °C
UV resistance	DIN EN ISO 4892-2 A
Flame resistance	UL 1581 § 1090 | UL 1581 § 1100 FT2 | IEC 60332-2-2
chemical resistance	Good, application-related testing
Gasoline resistance	Good, application-related testing
Oil resistance	Good, application-related testing | DIN EN 60811-404
Bending radius (fixed)	10 x Outer diameter

Tämän tietolomakkeen tiedot on laadittu suurimmalla mahdollisella huolellisuudella.
Vahingonkorvausvastuu koskien tietojen oikeellisuutta, laajuutta ja ajankohtaisuutta kattaa ainoastaan törkeän laiminlyönnin. Versio: 24.04.2024