MURR ELEKTRONIK
stay connected

M12 female receptacle 0° Y-cod. solder terminal

Ethernet CAT5
M12, 8-pole
Y-coded
shielded
Solder connection
Front mounting

Link to Product

Illustration

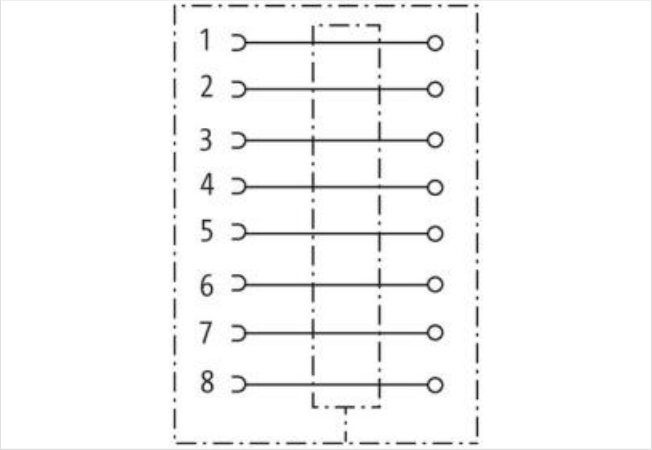

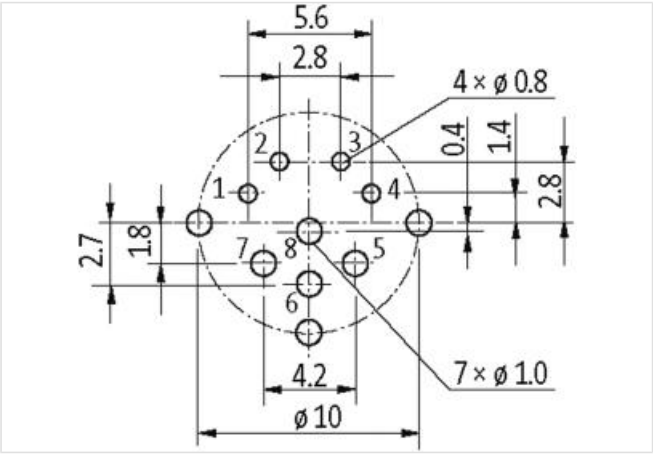

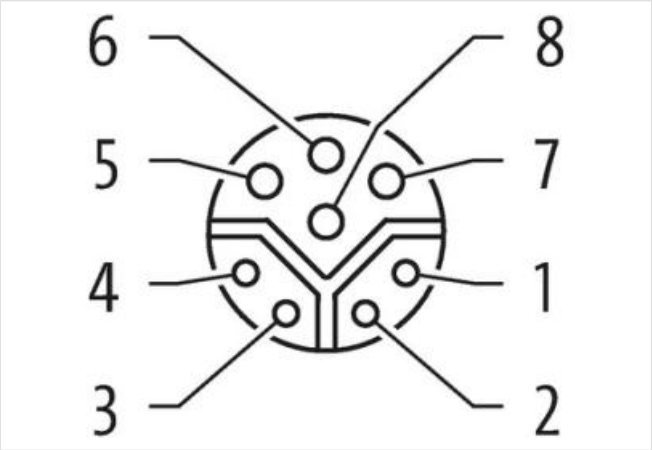

The information in this Product-PDF has been compiled with the utmost care.
Liability for the correctness completeness and topicality of the information is restricted to gross negligence. Version: 2024-05-05

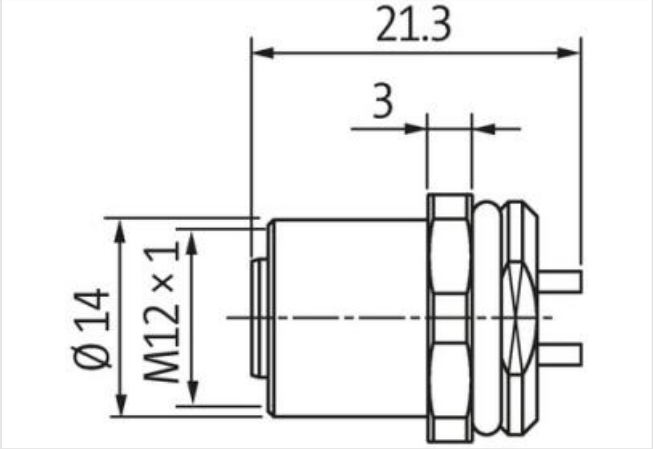

Product may differ from Image

Side 1	
Family construction form	M12
Coding	Y
Width across flats	SW14
Degree of protection (EN IEC 60529)	IP67
Commercial data	
ECLASS-6.0	27279220
ECLASS-6.1	27279220
ECLASS-7.0	27440103
ECLASS-8.0	27440103
ECLASS-9.0	27440109
ECLASS-10.1	27440109
ECLASS-11.1	27440109
ECLASS-12.0	27440109
ETIM-5.0	EC001855
customs tariff number	85366990
GTIN	4048879493765
Packaging unit	1
Electrical data | Supply	
Operating voltage AC max.	48 V
Operating voltage DC max.	50 V
Operating current per data contact max.	0,5 A
Operating current per power contact max.	6 A
Industrial communication	
Transfer parameters	CAT5, Class D (ISO/IEC 11801:2002), (EN 50173-1)
Data transmission rate max.	100 MBit/s
Industrial communication | Ethernet functionality	
duplex	Full duplex
Installation | Connection	
Tightening torque	0,6 Nm
Device protection | Electrical	
Additional condition protection degree	inserted, screwed

The information in this Product-PDF has been compiled with the utmost care.
Liability for the correctness completeness and topicality of the information is restricted to gross negligence. Version: 2024-05-05

Pollution Degree	3
Rated surge voltage	0,8 kV
Material group (IEC 60664-1)	I
Mechanical data | Material data	
Coating locking	Nickeled
Locking material	Zinc die-casting
Mechanical data | Mounting data	
Mounting method	inserted, screwed, Shaking protection
Environmental characteristics | Climatic	
Operating temperature min.	-40 °C
Operating temperature max.	85 °C
Important installation notes	
Note on strain relief	Protect the connectors by suitable measures from mechanical loads, e.g. by the usage of cable ties.
Note on bending radius	**Attention:** Observe the permissible bending radii when laying cables, as the IP protection class can be endangered by excessive bending forces.

The information in this Product-PDF has been compiled with the utmost care.
Liability for the correctness completeness and topicality of the information is restricted to gross negligence. Version: 2024-05-05