stay connected

MKN POWER SUPPLY 1-PHASE, LINEAR REGULATED

IN: 230VAC OUT: 2x10V/0,1ADC

INPUT: 230 V AC
OUTPUT: +-10 V DC
Current: 2× 50 mA
This power supply units meet the (EN 61000-3-2) standard for harmonic current.
Condensation not permitted

Link to Product

Illustration

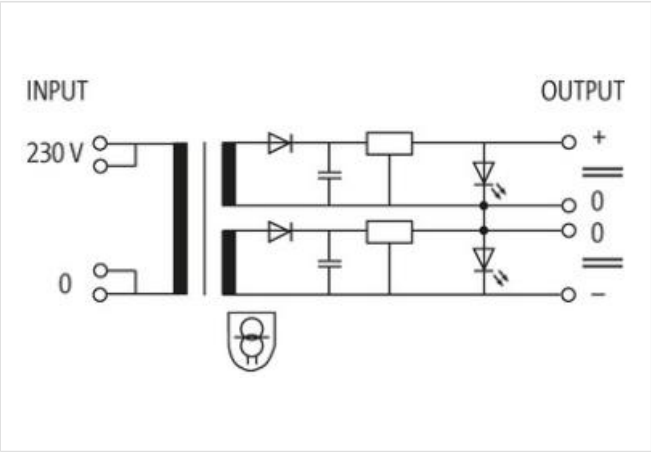

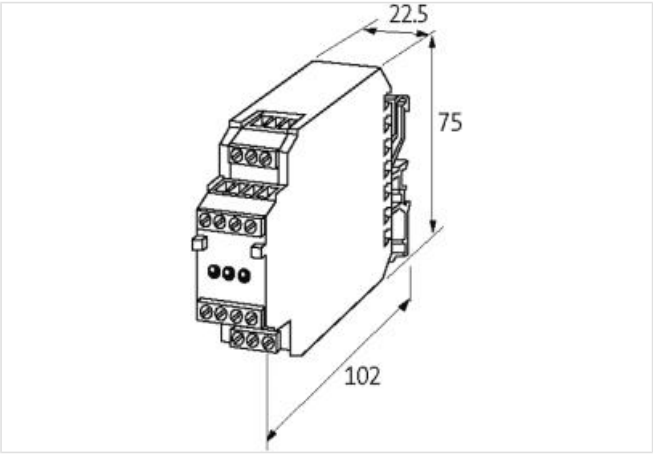

Product may differ from Image

Commercial data

ECLASS-6.0	27049002
ECLASS-6.1	27049002
ECLASS-7.0	27049002
ECLASS-8.0	27049002
ECLASS-9.0	27040701

The information in this Product-PDF has been compiled with the utmost care.
Liability for the correctness completeness and topicality of the information is restricted to gross negligence. Version: 2024-04-20

ECLASS-10.1	27040701
ECLASS-11.1	27040701
ECLASS-12.0	27040701
ETIM-5.0	EC002540
customs tariff number	85044095
GTIN	4048879079648
Packaging unit	1
Electrical data | Supply	
Power frequency	50 ... 60 Hz
Electrical data | Input	
Characteristic back-up fuse	Inertia
Input voltage AC min.	207 V
Input voltage AC max.	253 V
Input current	20 mA
External back-up fuse per phase max.	0,063 A
Electrical data | Output	
Output suppression	LED, Screening capacitor, VDR
Output current per channel max.	0,05 A
Ripple (s-s) max.	10 mV
Device protection | Electrical	
Overload protection output	yes
Short-circuit protection output	yes
Mechanical data | Mounting data	
Mounting method	geschnappt
Suitable for mounting type	Mounting rail TH35, G32, (EN 60715)
Environmental characteristics | Climatic	
Operating temperature min.	0 °C
Operating temperature max.	60 °C
Conformity	
Product standard	EN 61558-2-6, EN 62041 category II
EMC	EN 55011 B, EN 61000-3-2

The information in this Product-PDF has been compiled with the utmost care.
Liability for the correctness completeness and topicality of the information is restricted to gross negligence. Version: 2024-04-20